CG45x2+

PRODRY2+ STACK DRYING TUMBLER

ARCHITECTURAL/MECHANICAL
PRODUCT SPECIFICATIONS

ProDry2+

Inverter Drive

Capacity *lbs*	2 x 45
Cylinder Diameter *inch*	33
Cylinder Depth *inch*	30
Cylinder Volume *cu ft*	14.8
Net Weight *lbs*	690
Crated Weight *lbs*	915
Machine Width *inch*	34.5
Machine Depth *inch*	49.5
Machine Height *inch*	81.3
Door Openings *inch*	26.9
Floor to Door *inch*	49.3 (top)
Shipping Dimensions *inch* WxDxH	35.5 x 54 x 85
Exhaust Diameter *inch*	10
Exhaust Air Flow *cfm*	600 per pocket
Exhaust Back Pressure (max) *WCI*	0.90 both pockets
Required Makeup Air *sq in*	288 both pockets
Gas Connection *inch*	1/2 NPT
Gas Heating *BTU/h*	95,000
Gas Pressure (max/recommended/min)	
Natural Gas *wc*	10.5 / 6.5 / 5
Propane *wc*	13 / 11 / 10

GAS MODELS

AVAILABLE VOLTAGES	WIRE CONDUCTOR	FULL LOAD AMPS	RECOMMENDED BREAKER SIZE
200-240/50-60/1	2W+G	12	15
380-415/50-60/3	3W+G	6	15
440-480/50-60/3	3W+G	6	15

SIDE VIEW

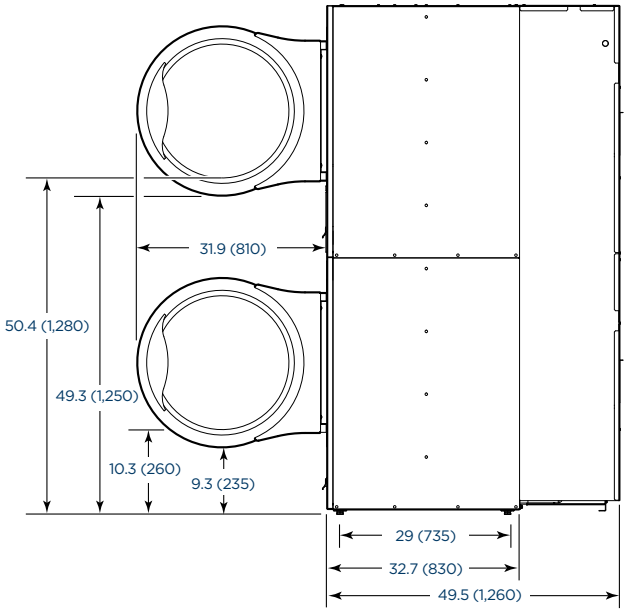

BACK VIEW

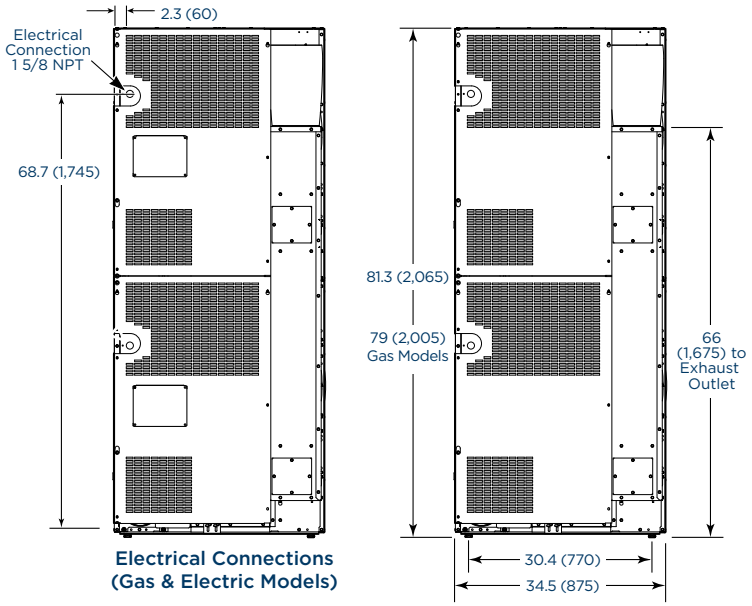

Electrical Connections (Gas & Electric Models)

TOP VIEW

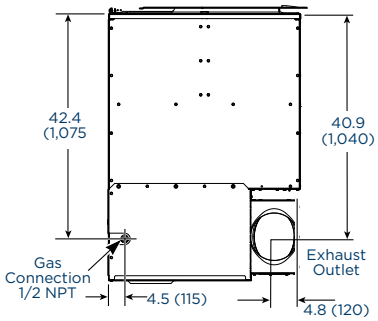

Specifications subject to change without notice or obligation. Contact Continental Laundry Solutions at (800) 256-1073 for dimensions not shown or for clarification.